Week No -5 وحدة الاسبوع الخامس

- Uniplolor junction transistor, Construction
- Theoretical operation
- Using the transistor as relaxation oscillator
- Oscillator practical example

1- Over view الظرة الشاملة

A-Population target
الفئة المستهدفة

- **Student of Second year of Electrical Department**

طلبة قسم الكهرباء – المرحلة الثانية

B –Rationale مبررات الوحدة

- ✓ It is very important to study the UJT transistor and show the difference between BJT and UJT transistor.
- ✓ circuit diagram of relaxation oscillator.
- ✓ Also to see the waveforms of voltage and current waveforms .

C – Central Idea الفكرة المركزية

- Definition and construction of UJT.
- Theory of operation.
- V-I charteristics .
- Relaxation oscillator.
- Examples

D – Instructional Objectives اهداف الوحدة

On completion the student will be able to

- Draw the symbol and circuit of UJT transistor.
- understand the operation of the UJT.
- Analyze the operation regions of the UJT transistor.
- Design the circuit of the relaxation oscillator.

(2)Pre – Test الاختبار القبلي

1) Draw the symbol of UJT.

2) Draw the construction of UJT.

3) Draw the model of UJT.

Check your answers in key answer

Unijunction Transistors (UJT)

- **Construction: Originally called "Double-based Diodes."**
  - **"P" Type material doped into the "N" type base material.**
  - **Placement of the Emitter into the Base determines the voltage level (%) at which the the UJT fires.**
  - **This % is called the** *"Intrinsic Standoff Ratio (η)."*
    - **Once constructed, the Intrinsic Standoff Ratio cannot be changed.**
    - **The actual voltage value at which the UJT fires is determined by the amount of source voltage applied.**

UJT Block Diagram

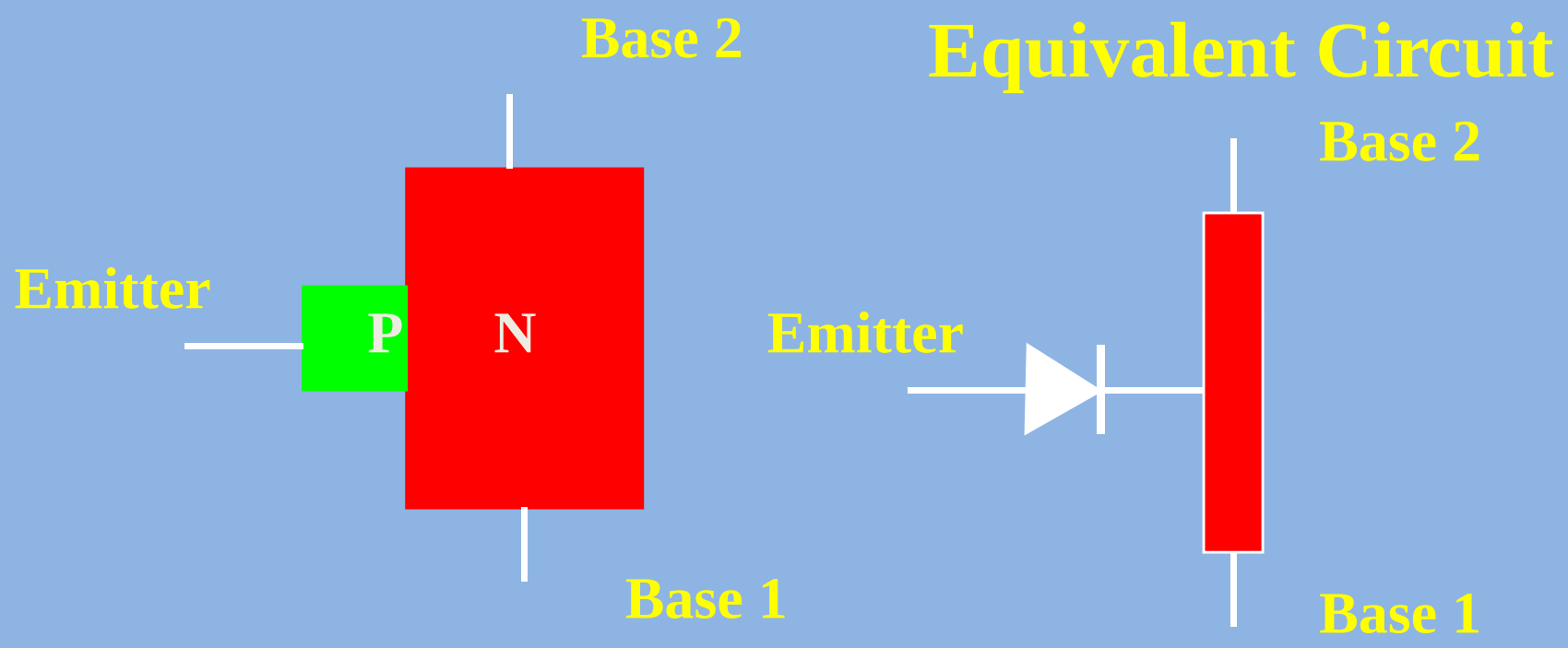

UJT Schematic Symbol

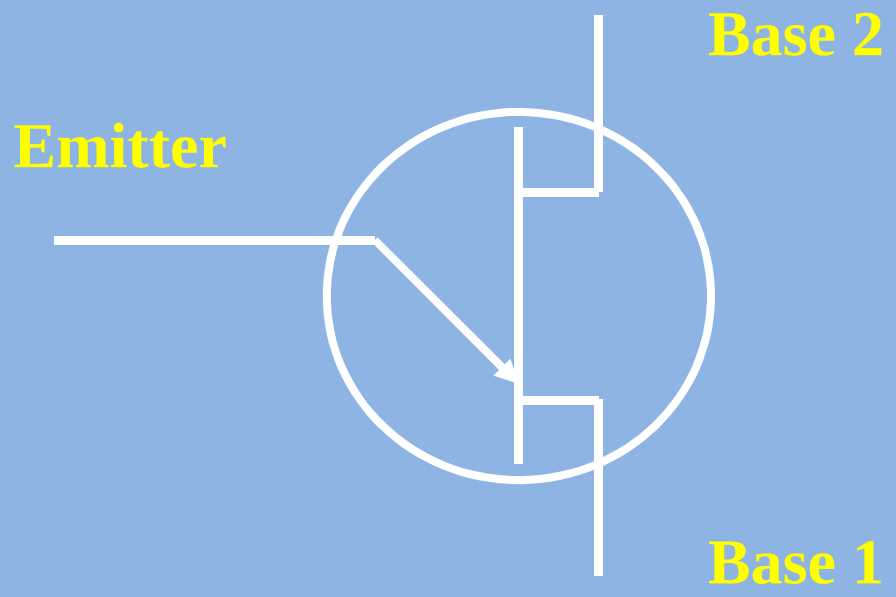

UJT Saw tooth Generator

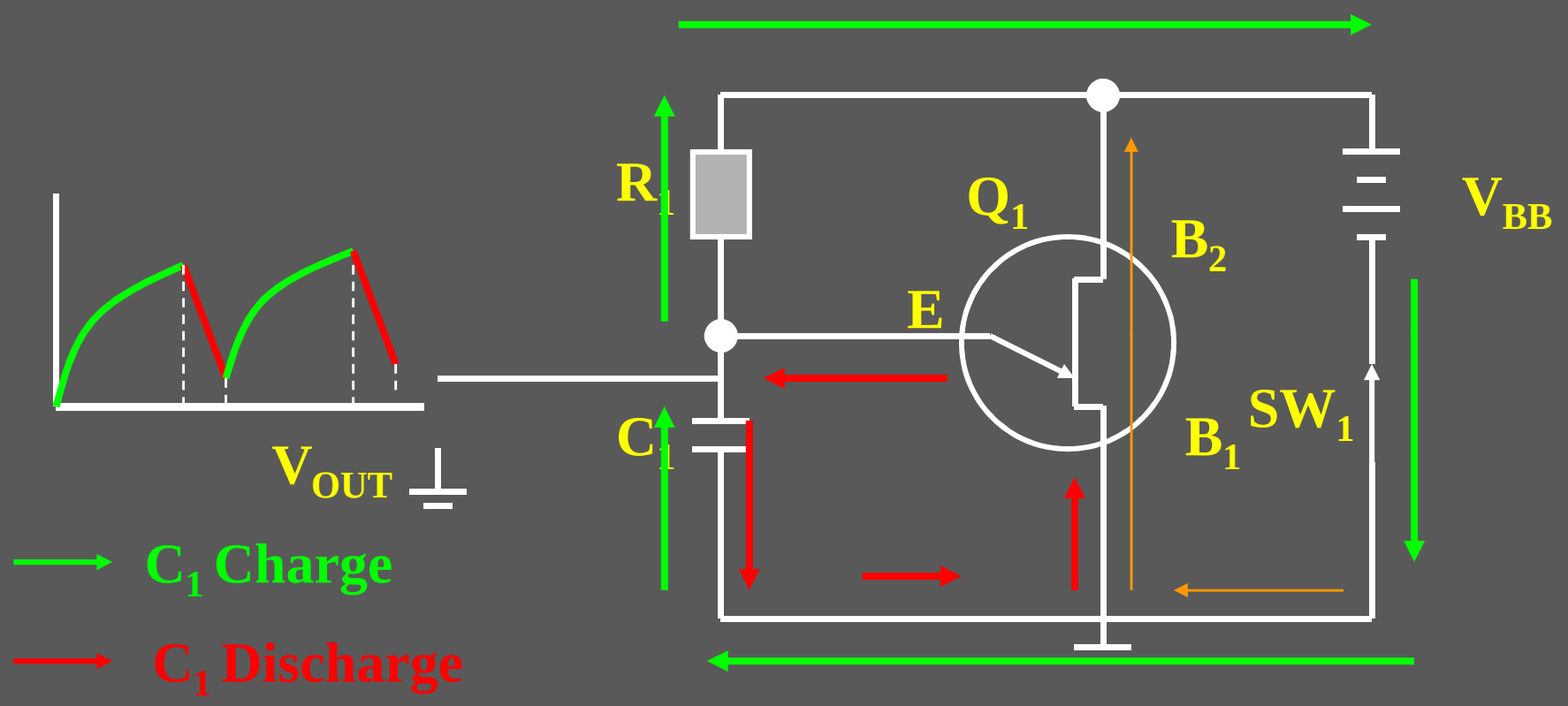

UJT Relaxation Oscillator

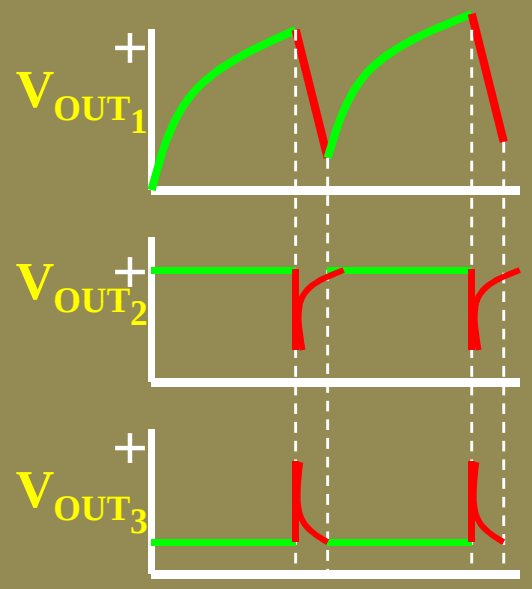

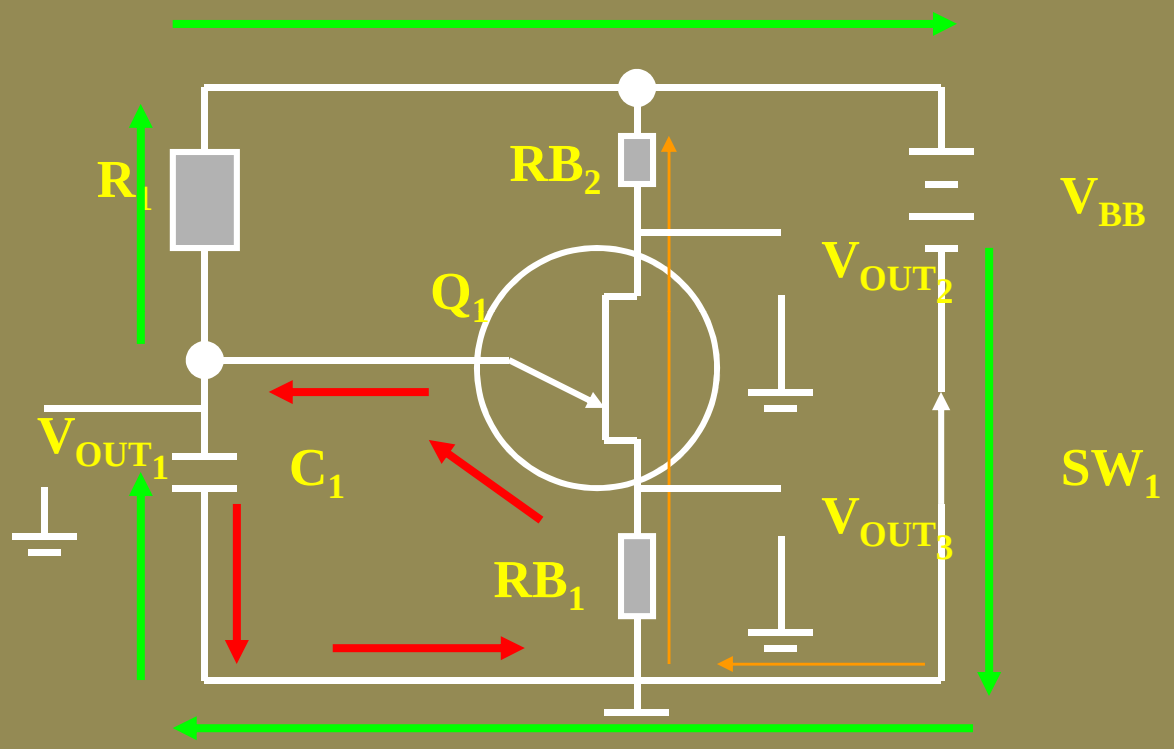

C_1 Charge

C_1 Discharge

UJT relaxation oscillator

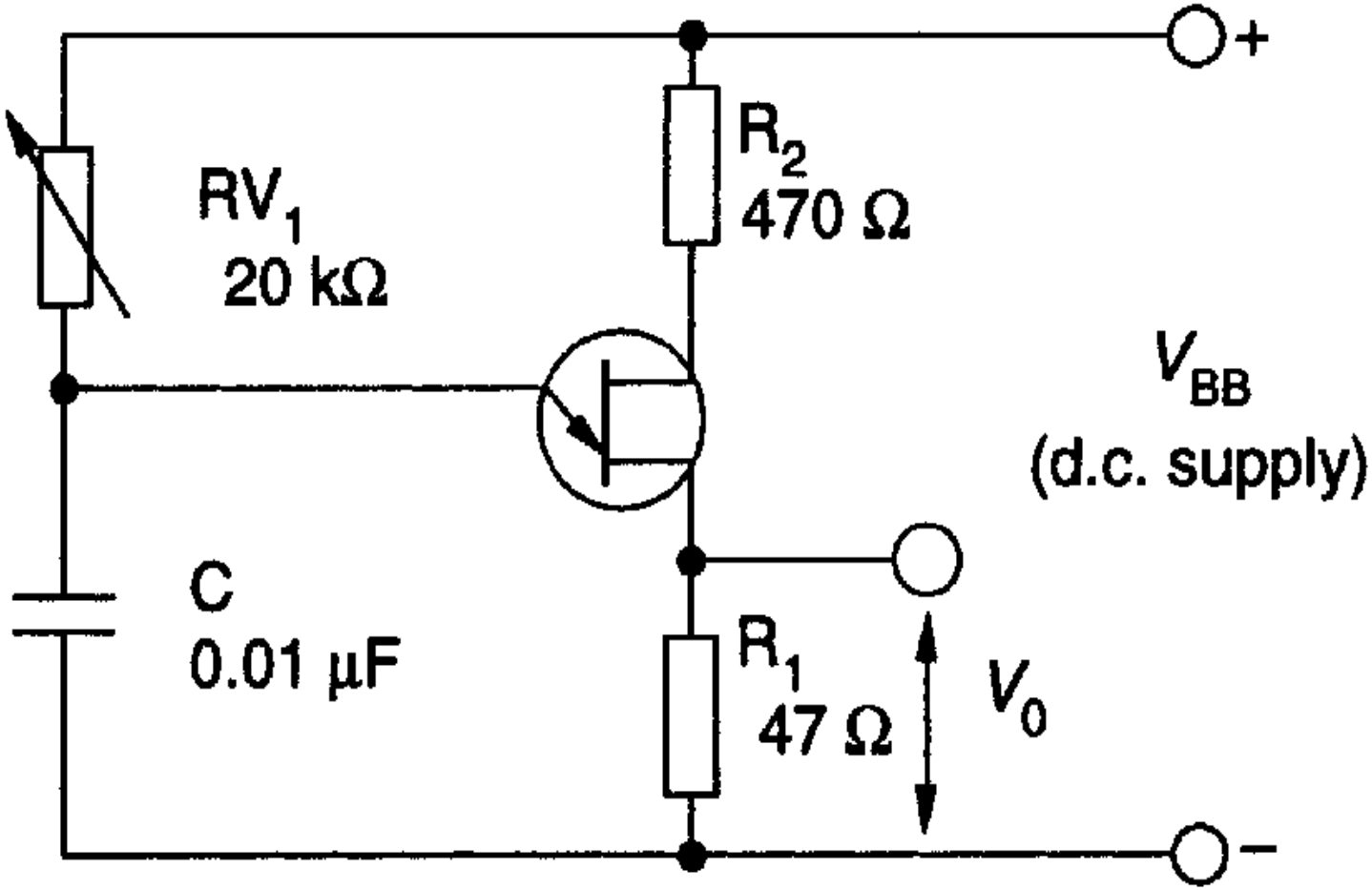

Relaxation oscillator waveforms

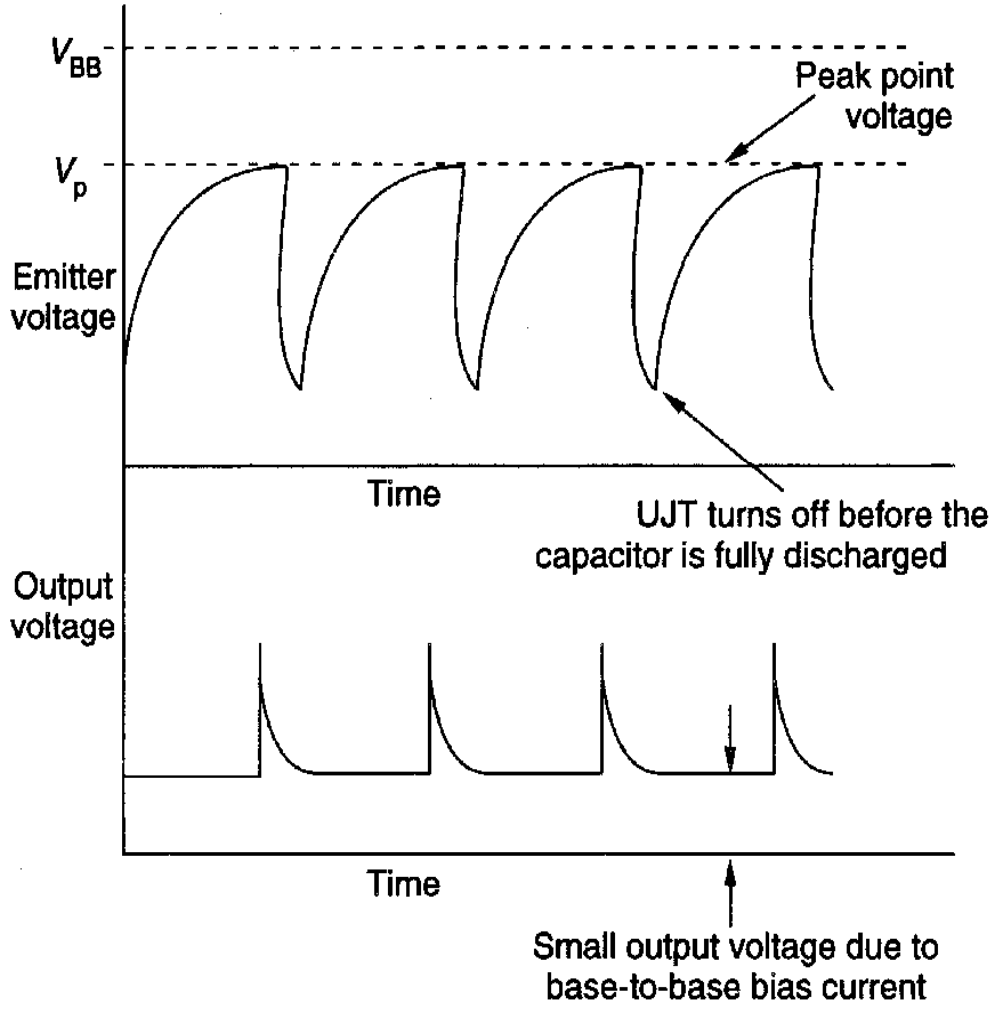

3-The test

The Unijunction Transistor (UJT)

Although a unijunction transistor is not a thyristor, this device can trigger larger thyristors with a pulse at base B1. A unijunction transistor is composed of bar of N-type silicon having a P-type connection in the middle. See Figure (a). The connections at the ends of the bar are known as bases B1 and B2; the P-type mid-point is the emitter. With the emitter disconnected, the total resistance R_{BBO}, a datasheet item, is the sum of R_{B1} and R_{B2} as shown in Figure (b). R_{BBO} ranges from 4-12kΩ for different device types. The intrinsic standoff ratio η is the ratio of R_{B1} to R_{BBO}. It varies from 0.4 to 0.8 for different devices. The schematic symbol is Figure (c)

UJT transistor: (a) Construction, (b) Model, (c) Symbol

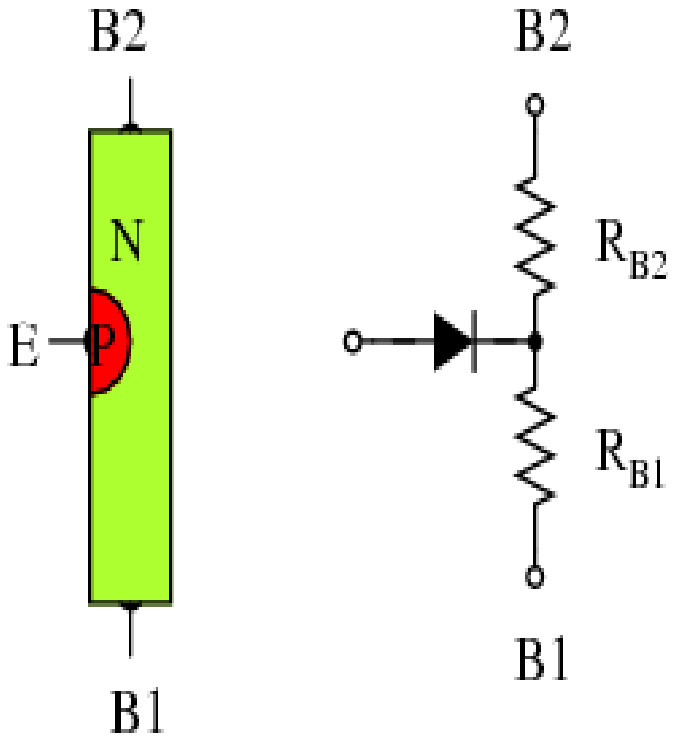

$$R_{BB0} = R_{B1} + R_{B2}$$

$$\eta = \frac{R_{B1}}{R_{B1} + R_{B2}}$$

$$\eta = \frac{R_{B1}}{R_{BB0}}$$

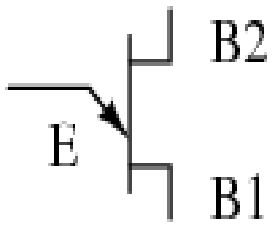

(a) (b) (c)

Uni-Junction Transistor

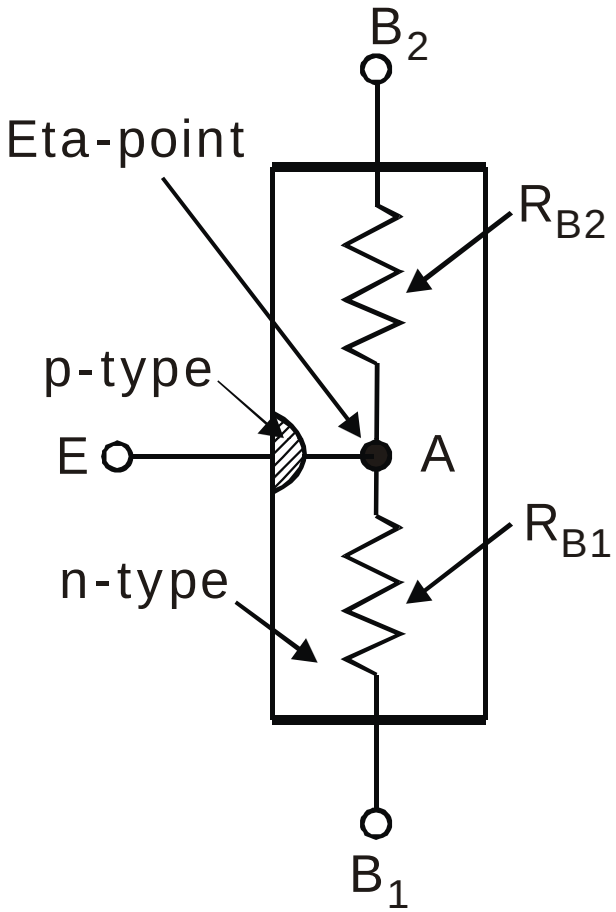

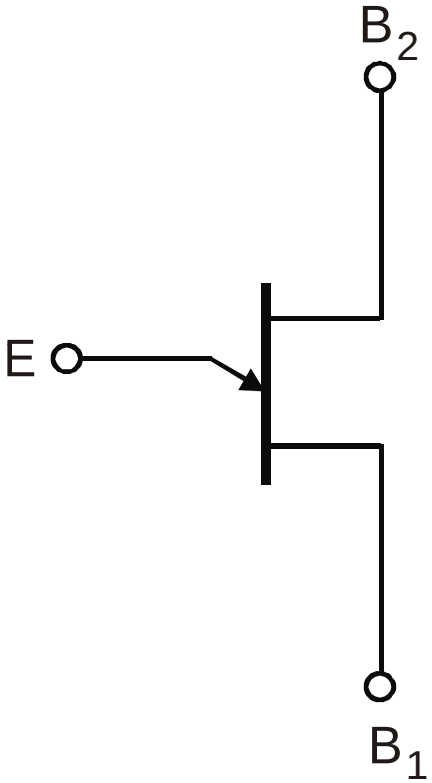

$$R_{BB} = R_{B1} + R_{B2}$$

Basic Structure

Symbol

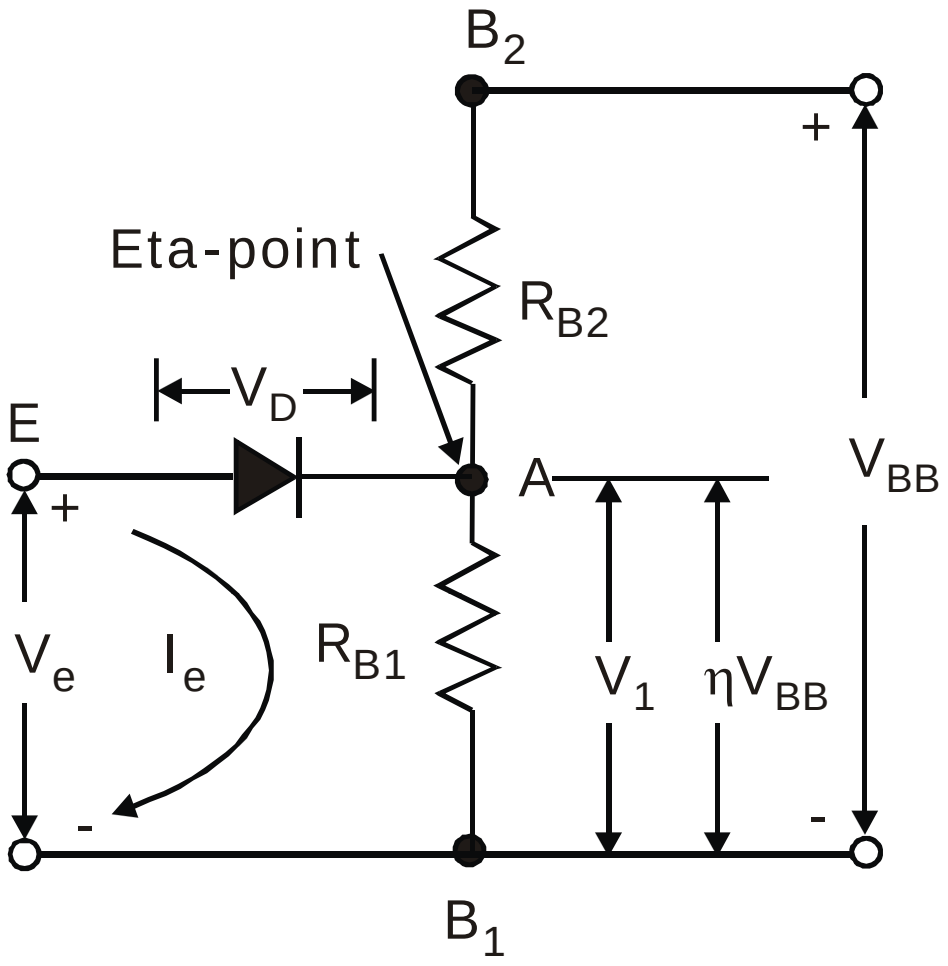

Equivalent Circuit of UJT

$$V_1 = V_{BB}\frac{R_{B1}}{R_{B1}+R_{B2}}$$

$$= \eta V_{BB}$$

$$V_P = \eta V_{BB} + V_D$$

UJT Characteristics

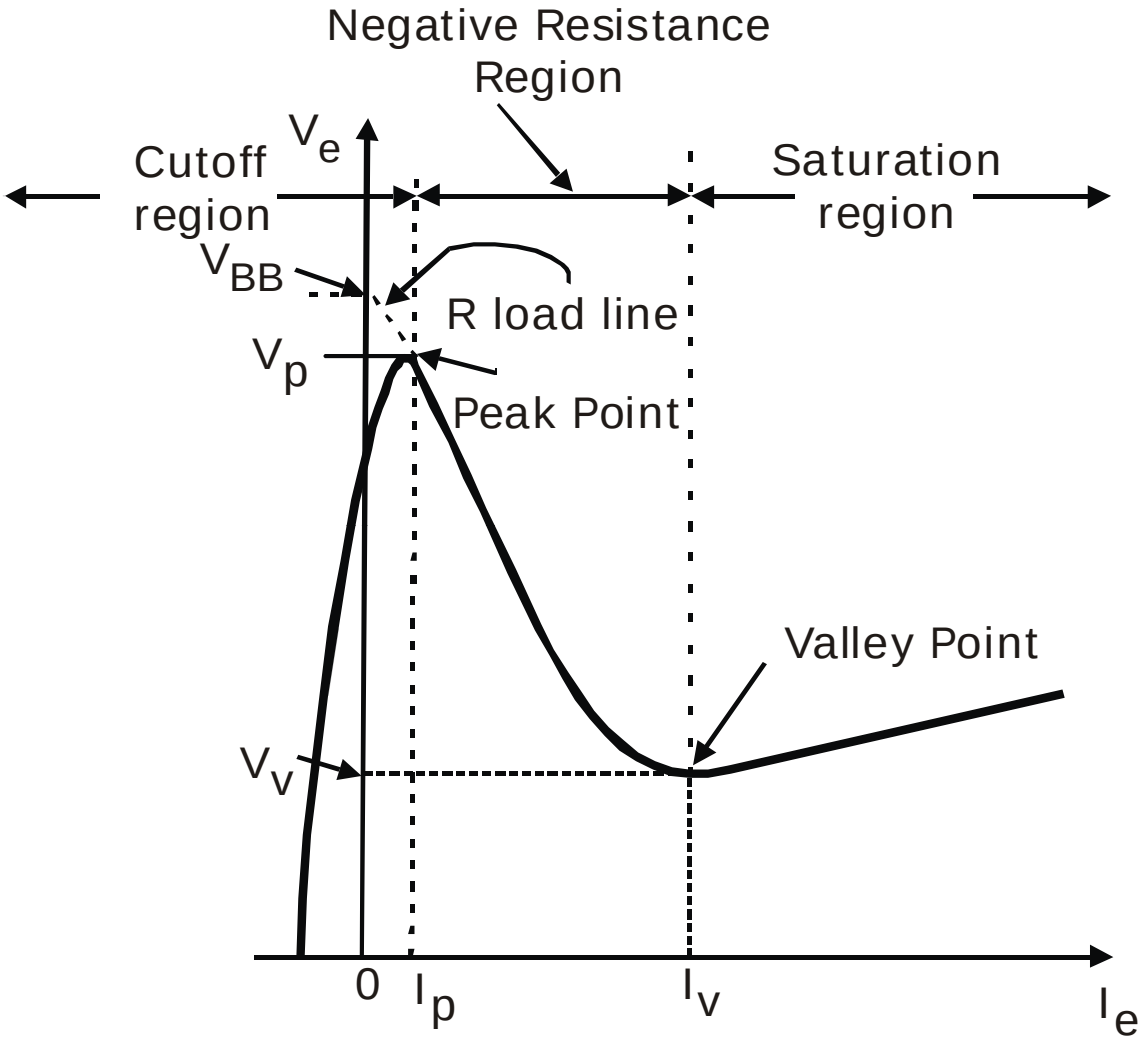

UJT Relaxation Oscillator

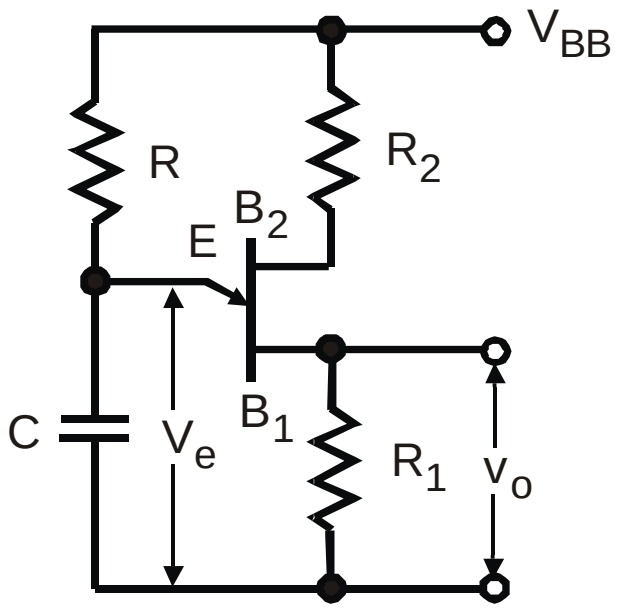

Circuit Diagram

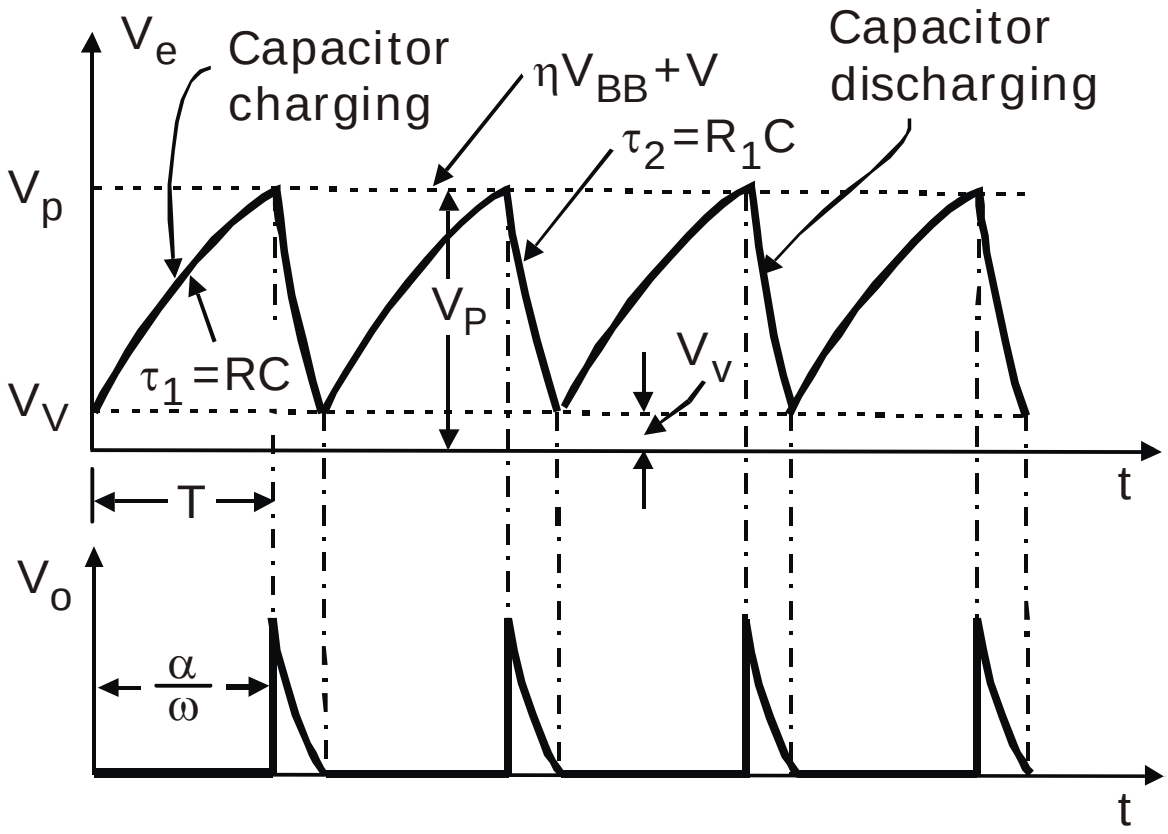

Waveforms

Expression for period of oscillation T

Voltage of capacitor

$$V_C = V_{final} + \left(V_{initial} - V_{final}\right) e^{-t/RC}$$

$$At \;\; t = T,$$

$$V_C = V_P, V_{initial} = V_V, V_{final} = V_{BB}$$

$$\therefore V_P = V_{BB} + \left(V_V - V_{BB}\right) e^{-T/RC}$$

$$\Rightarrow T = RC \ln\left[\frac{V_{BB} - V_V}{V_{BB} - V_P}\right]$$

$$\text{if } V_V < V_{BB},$$

$$T = RC\ln\left(\frac{V_{BB}}{V_{BB} - V_P}\right) = RC\ln\left[\frac{1}{1 - \frac{V_P}{V_{BB}}}\right]$$

$$But\ V_P = \eta V_{BB} + V_D$$

$$V_D << V_{BB}$$

$$V_P = \eta V_{BB}$$

$$T = RC \ln\left[\frac{1}{1-\eta}\right]$$

Design

$$V_{BB} - I_P R > V_P$$

$$\therefore R < \frac{V_{BB} - V_P}{I_P}$$

$$V_{BB} - I_V R < V_V$$

$$\therefore R > \frac{V_{BB} - V_V}{I_V}$$

$$t_g = R_{B1} C \quad R_{B2} = \frac{10^4}{\eta V_{BB}}$$

Unijunction transistor: (a) emitter characteristic curve, (b) model for V_P

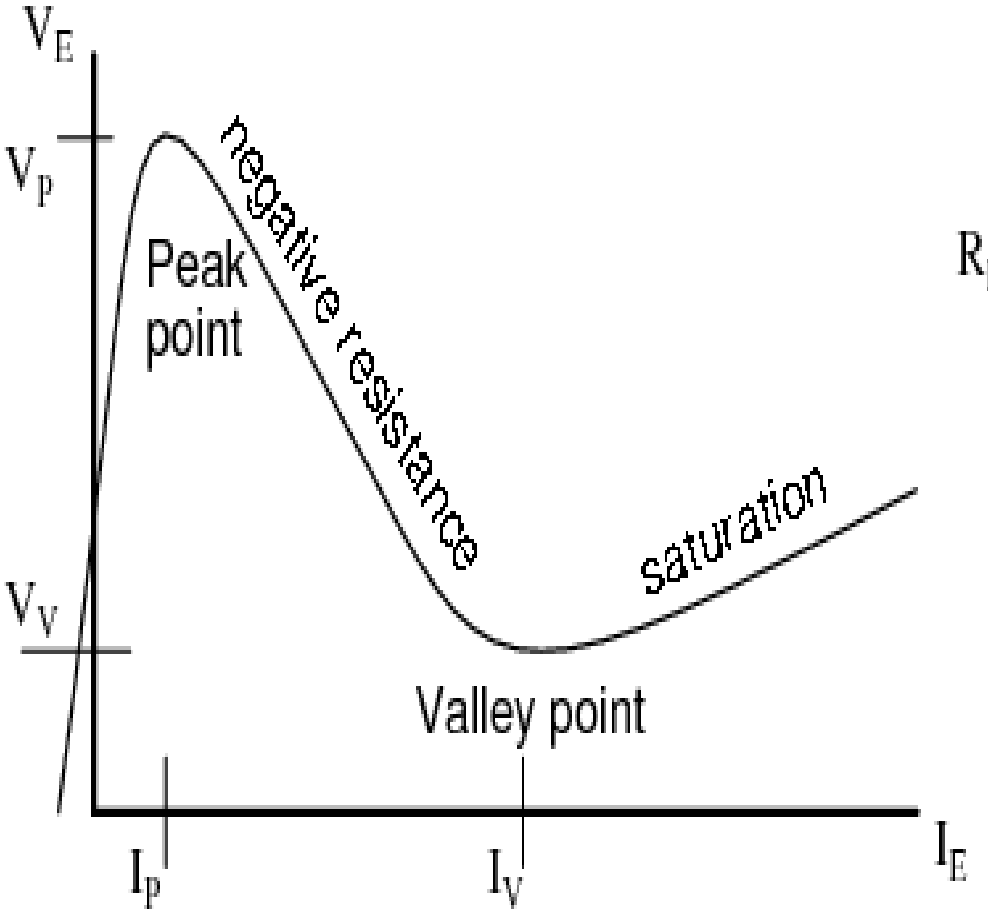

(a)

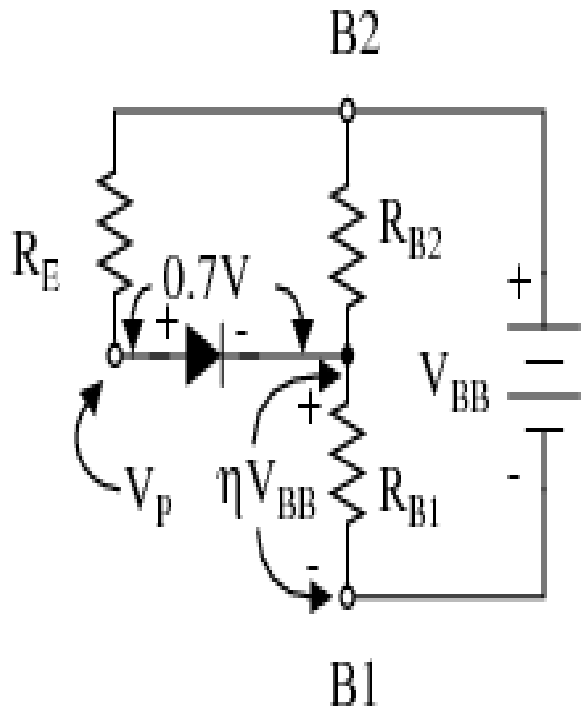

(b)

$$V_P = 0.7 + \eta V_{BB}$$

$$V_V \approx 0.10(V_{BB})$$

Unijunction transistor relaxation oscillator and waveforms. Oscillator drives SCR.

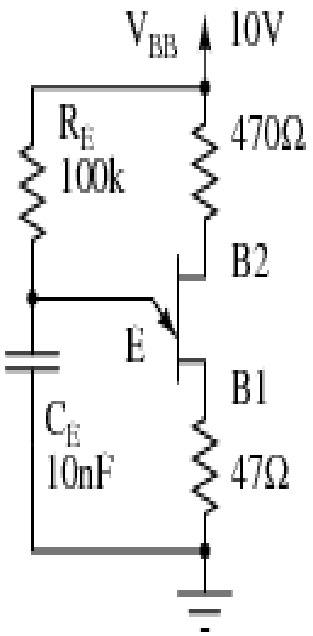

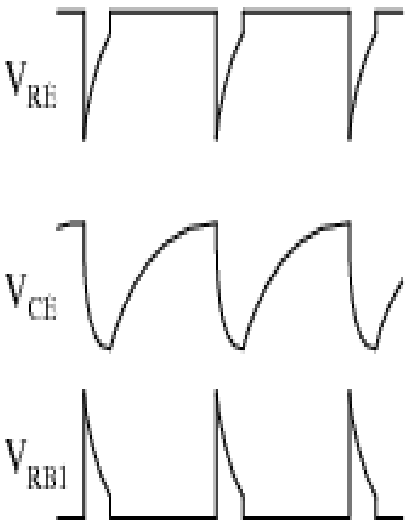

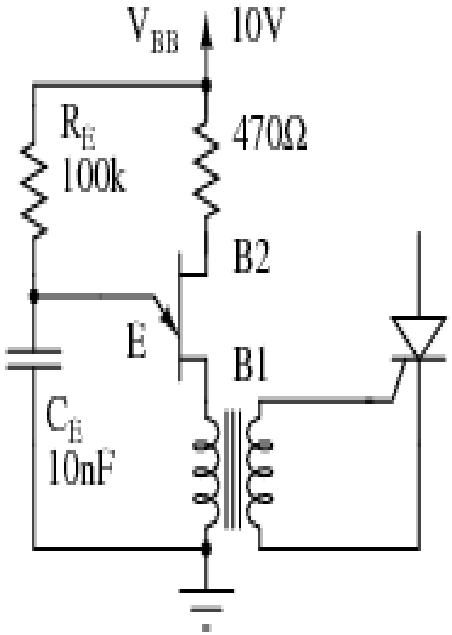

2n2647 R_{BBO} = 4.7—9.1k η=0.68—0.82 I_V=8mA I_P=2μA

$$f = \frac{1}{RC\ln(1/(1-\eta))} = \frac{1}{(100k)(10nF)\ln(1/(1-0.75))} = 1.39kHz$$

Example

We select the same V_{BB}=10V used for the unijunction transistor example. We select values of R1 and R2 so that η is about 2/3. We calculate η and V_S. The parallel equivalent of R1, R2 is R_G, which is only used to make selections from Table below. Along with V_S=10, the closest value to our 6.3, we find V_T=0.6V, in Table below and calculate V_P.

$R1 = 27k \quad R2 = 16k \qquad V_{BB} = 10V$

$$\eta = \frac{R1}{R1 + R2} \qquad \eta = \frac{27}{27 + 16} = 0.6279$$

$$V_S = \eta V_{BB} \qquad V_S = 0.6279(10) = 6.279V$$

$$R_G = \frac{R1 \cdot R2}{R1 + R2} \qquad R_G = \frac{27k \cdot 16k}{27k + 16k} = 10k$$

For R_G=10k and V_S=10V, $V_T = 0.6V$

$$V_P = V_T + V_S \qquad V_P = 0.6 + 6.3 = 6.9V$$

Quiz

Draw the circuit diagram of the relaxation oscillator.

Check your answers in key answer

4- Post –Test الاختبار البعدي

Draw the circuit diagram of emitter characteristic curve of UJT.

Check your answers in key answer

5- key answer

Pre-test

1) 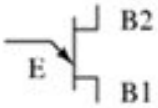

2) 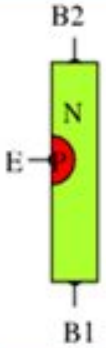

3) 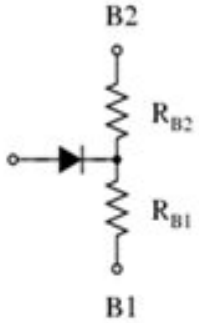

Quiz

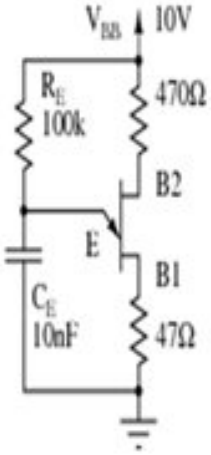

Pre-test

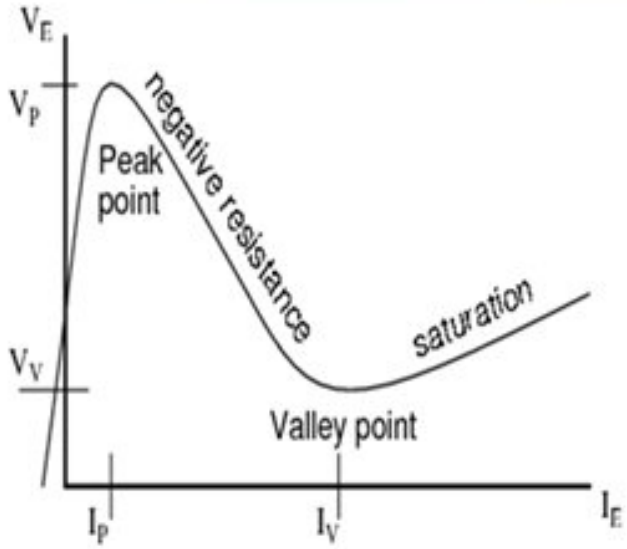

References

[1] “Power Electronics”, P.C. Sen; Tata MC Grawhill publishing company limited; 1995.

[2] “Power Electronics, Converters, Applications and Design”; Mohan, Undeland, Robbins; John Willey and Sons Ine, Third Edition, 2003

[3]http://10.152.13.201/login?dst=http%3A%2F%2Fwww.google.iq%2Furl%3Fq%3Dhttp%3A%2F%2Foldwww.iet.aau.dk%2F%7Esmn%2Fundervisning%2FPED8%2F5mm%2FSlides.ppt%26sa%3DU%26ei%3DuLTHTZGhAcOYhQfS8rT6Aw%26ved%3D0CB0QFjAI%26usg%3DAFQjCNGV4Ys95NCATIxn5bsEdth4HPjSAA